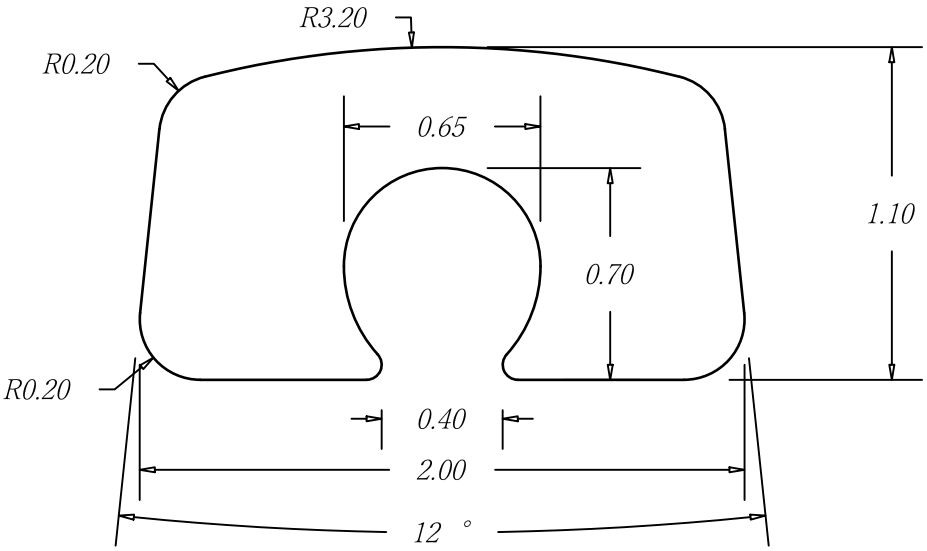
R3.20
R0.20
0.65
1.10
0.70
R0.20
0.40
2.00
12 °